Data Sheet	AS04804PS

The **AS04804PS** is designed for applications that require robust low-frequency response and low THD in compact designs.

Features:

- 85dBSPL: P_{DRIVE} = 1.0W, distance = 0.5m
- 8.0W continuous dissipation
- 150Hz free-air resonance
- 48mm diameter x 27mm dimensions

Specifications

(Specifications measured with following conditions: ambient temperature; 15°C ≤ T_A ≤_35°C, relative humidity; 25% ≤ RH_A ≤ 75%, according to standard GB/T9396-1996, unless otherwise stated. Judgement Condition: ambient temperature; 20 ±2°C; relative humidity; 63% ≤ RH_A ≤ 67%. Product shelf life valid for 12 months.

Parameters	Values	Units
Rated Input Power	10.0	Watts
Maximum Input Power	12.0	Watts
Impedance	4 ±15%	Ohms
Sensitivity (SPL) P_{DRIVE} = 1.0W, distance = 0.5m f = ave. 0.8kHz, 1.0kHz, 1.2kHz, 1.5kHz	85 ±3	dB
Resonant Frequency (f_O)	150 ±20%	Hz
Frequency Range (-10 dB)	120 ≤ f ≤ 20,000	Hz
Total Harmonic Distortion (THD) f = 1kHz, P_{DRIVE} = 1.0W	≤ 5	%
Frame Material	Iron	-
Magnet Material	NdFeB	-
Diaphragm Material	NBR + Paper	-
Weight	74	gm
Buzz, Rattle, etc.	Not audible with P_{DRIVE} = 8.0W, sine wave	-
Polarity	Applying positive dc current to "+" terminal moves diaphragm forward	-
Operating Temperature	-25 ≤ T_O ≤ 60	°C
Storage Temperature	-25 ≤ T_S ≤ 60	°C
Environmental Compliances	ROHS/REACH	-

Measurement Method (measured with P_{DRIVE} = 1.0, distance = 0.5m)

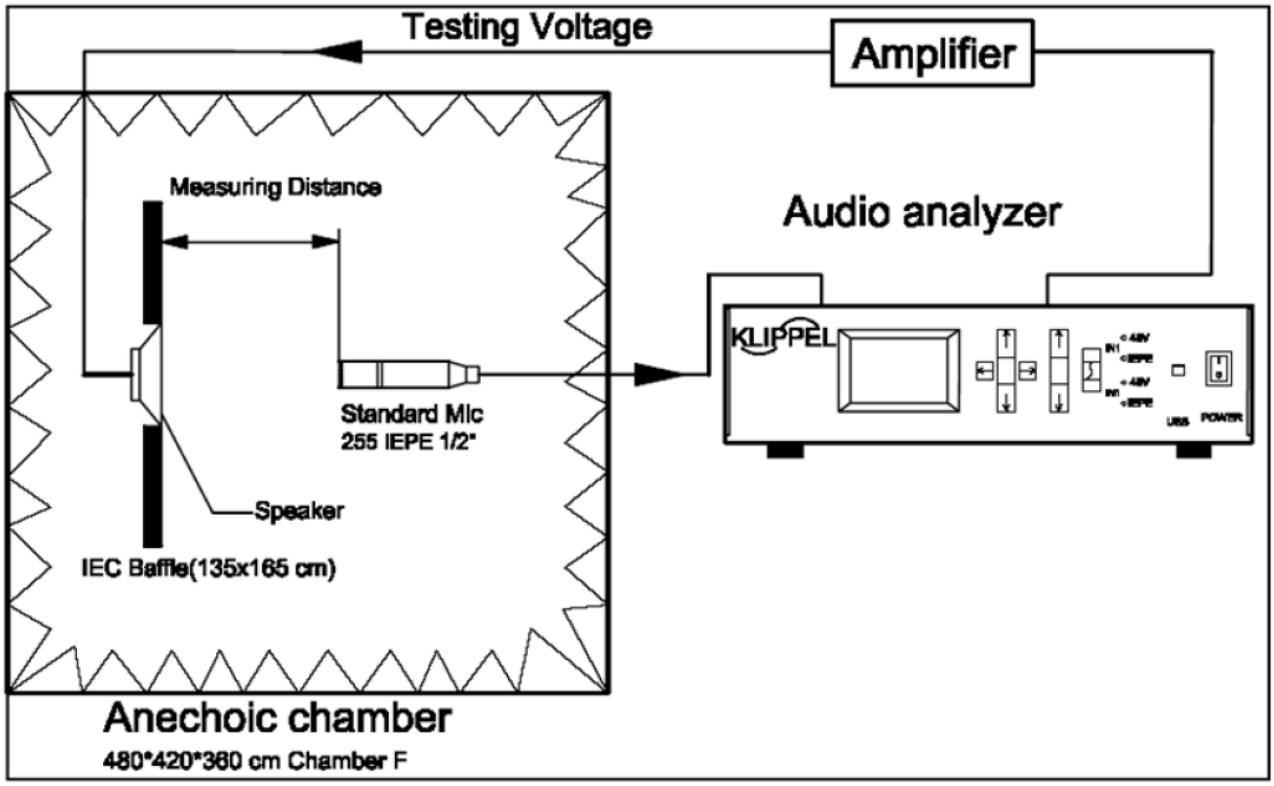

Typical Frequency Response (P_{DRIVE} = 1W, distance = 0.5m)

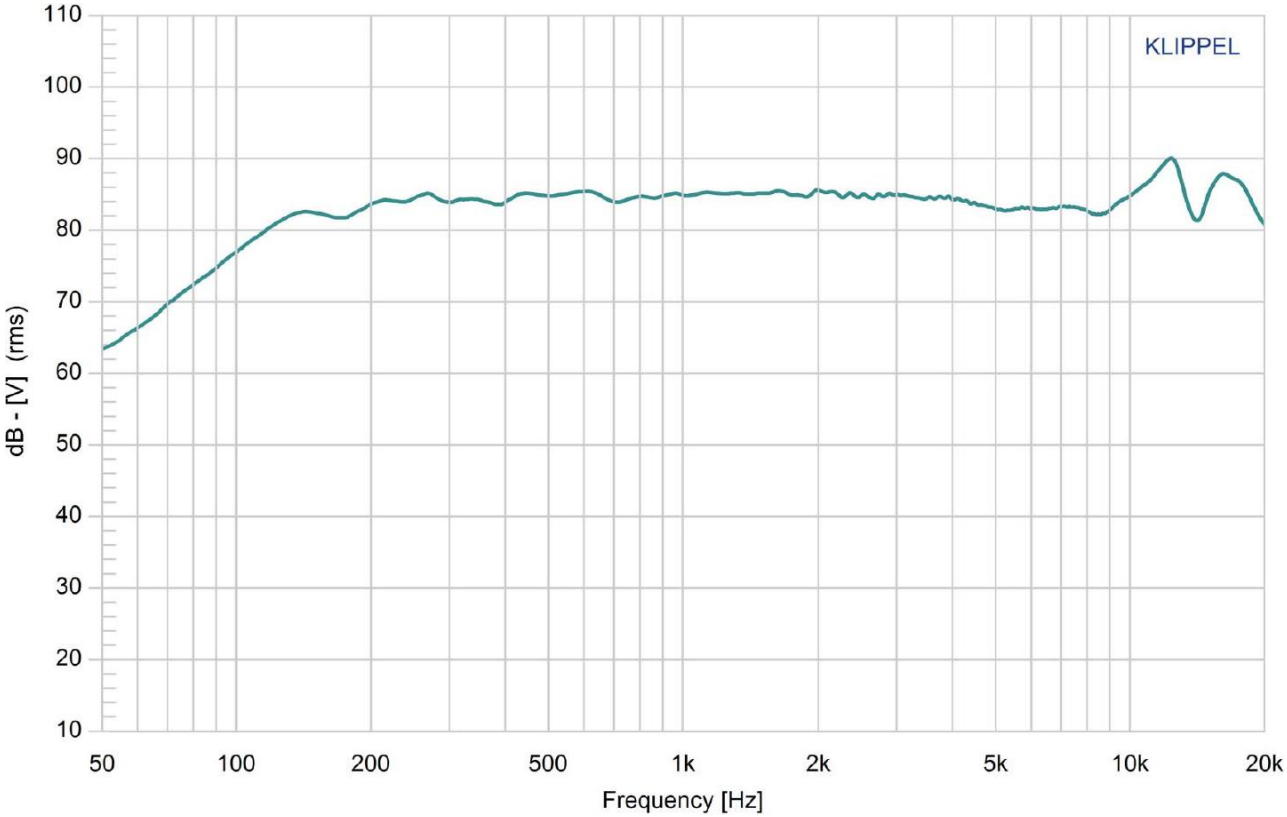

Typical THD vs. Frequency (P_{DRIVE} = 1W)

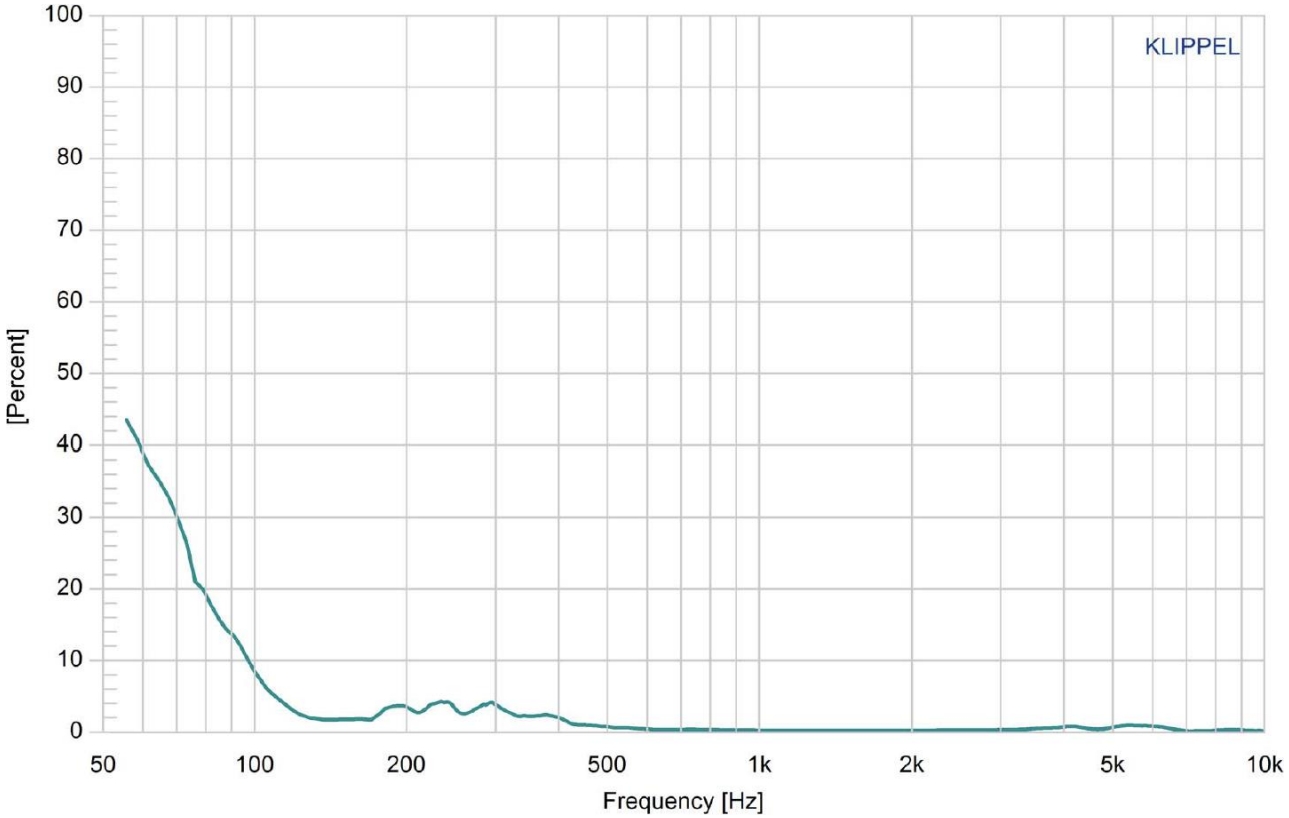

Typical Impedance Response

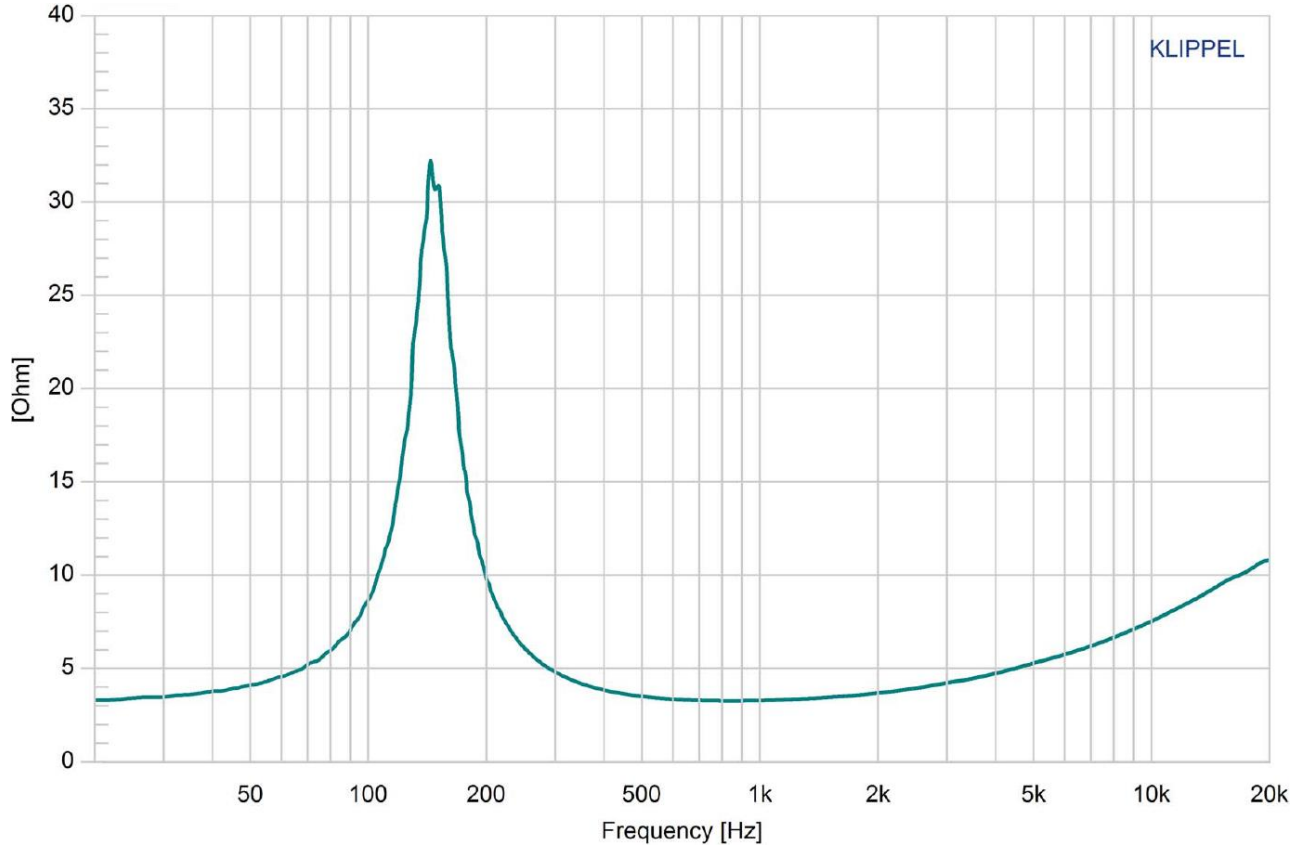

Thiele/Small Parameters

Theile/Small Parameters			
Specification	**Electrical Parameters Description**	**Value**	**Unit**
Re	Electrical voice coil resistance at DC	3.48	Ohm
Le	Frequency independent part of voice coil inductance	0.082	mH
L2	Para-inductance of voice coil	0.074	mH
R2	Electrical resistance due to eddy current losses	3.19	Ohm
Cmes	Electrical capacitance representing moving mass	170.39	µF
Lces	Electrical inductance representing driver compliance	5.69	mH
Res	Resistance due to mechanical losses	29.72	Ohm
fs	Driver resonance frequency	161.6	Hz
	Mechanical Parameters (Using a laser)		
Mms	Mechanical mass of driver diaphragm assembly including air load	1.544	g
Mmd (Sd)	Mechanical mass of voice coil and diaphragm without air load	1.503	g
Rms	Mechanical resistance of total-driver losses	0.305	kg/s
Cms	Mechanical compliance of driver suspension	0.628	mm/N
Kms	Mechanical stiffness of driver suspension	1.59	N/mm
Bl	Force factor (Bl product)	3.01	-
Lambda s	Suspension creep factor	0.065	-
	Loss Factors		
Qtp	total Q-factor considering all losses	0.54	-
Qms	Mechanical Q-factor of driver in free air considering Rms only	5.143	-
Qes	Electrical Q-factor of driver in free air considering Re only	0.602	-
Qts	total Q-factor considering Re and Rms only	0.539	-
	Other Parameters		
Vas	Equivalent air volume of suspension	0.1049	-
n0	Reference efficiency (2 pi-radiation using Re)	0.071	%
Lm	Characteristic sound pressure level (SPL at 1m for 1W @ Re)	80.69	dB
Lnom	Nominal sensitivity (SPL at 1m for 1W @ Zn)	81.29	dB
rmse Z	Root-mean-square fitting error of driver impedance Z(f)	5.28	%
rmse Hx	Root-mean-square fitting error of transfer function Hx (f)	2.46	%
Series Re	Resistance of series resistor	0	Ohm
Sd	Diaphragm area	10.86	cm^2

Reliability Testing

Type of Test	Test Specifications	Judgement
High Temperature Test GB2423.2-81	96 hours at +60°C ± 2°C followed by one hour in normal room temperature	SPL shall not deviate by ±3dB. Resonant frequency shall not deviate by ±50Hz. (compared with pre-test measurement)
Low Temperature Test GB2423.1-81	96 hours at -25°C ± 2°C followed by one hour in normal room temperature	
Humidity Test GB5170.18-87	96 hours at +40°C ± 2°C with relative humidity between 90% and 95% followed by 6 hours in normal room temperature	
Temperature Cycle Testing GB5170.18-87	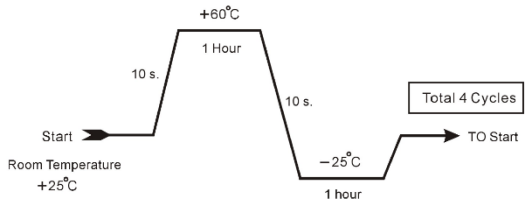	SPL shall not deviate by ±4dB. Resonant frequency shall not deviate by ±80Hz. (compared with pre-test measurement)
Vibration Test GB11606.8-89	Frequency 30±15 Hz, Amplitude 1.5 mm for 3 Hours	SPL shall not deviate by ±3dB. (compared with pre-test measurement)
Drop Test GB2423.8-81	75 cm free falling on concrete floor, 10 times.	
Load Test GB/T12060.5-2011	Speaker should not fail after applying 20Hz ~ 20kHz pink noise with HPF rated power input (RMS), 96 hours.	

Dimensions (All dimensions in mm; tolerance is +0.2mm, unless otherwise stated.)

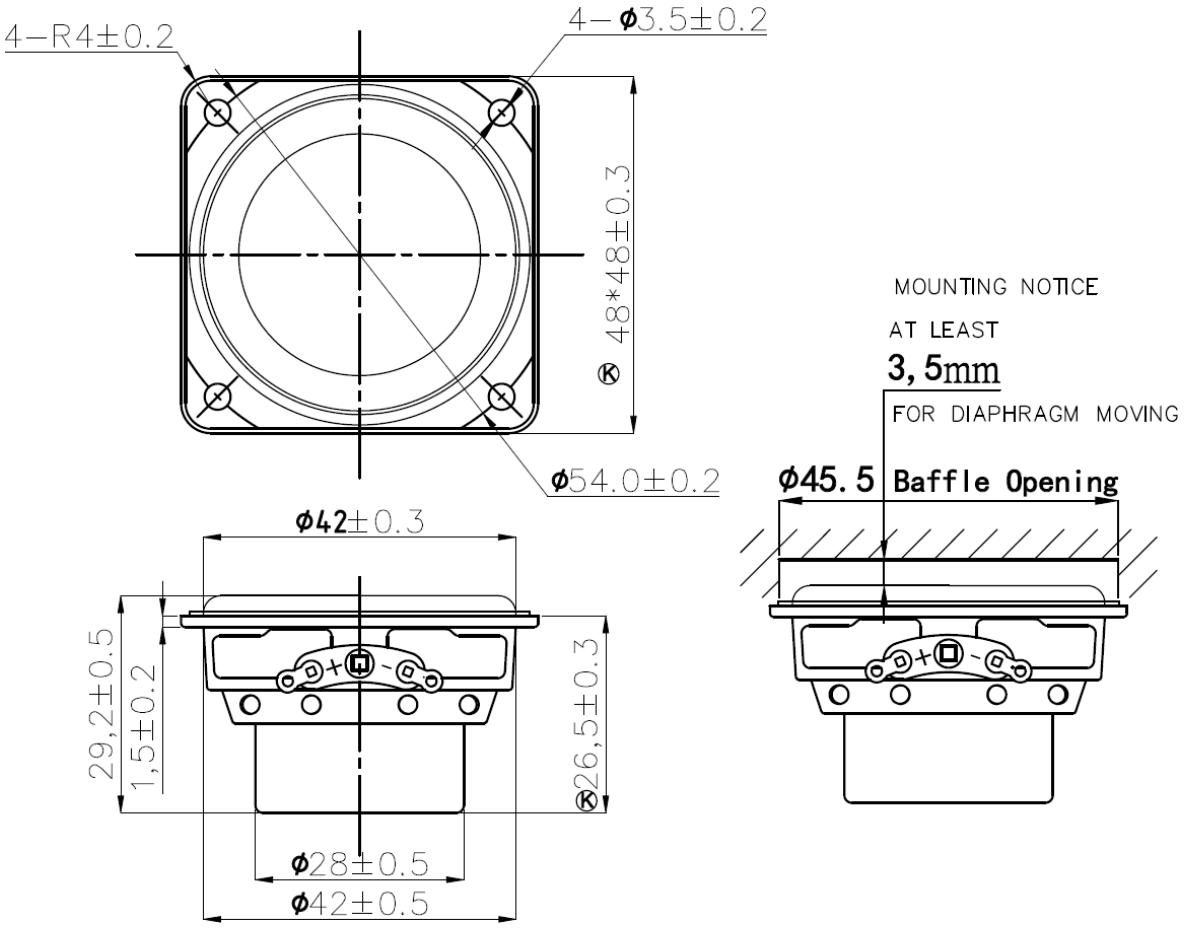

Packaging

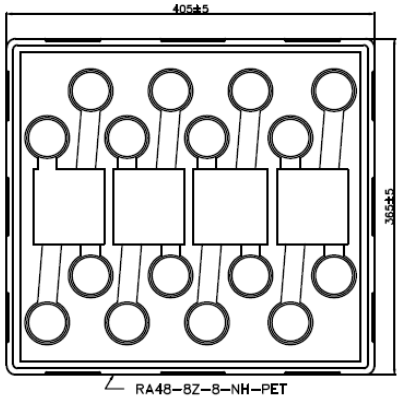

NOTE
16 PCS per Layer
Total 5 Layer per box
Total 80 PCS per box
41.5*38.5*20.5 cm
HF+ROHS 2

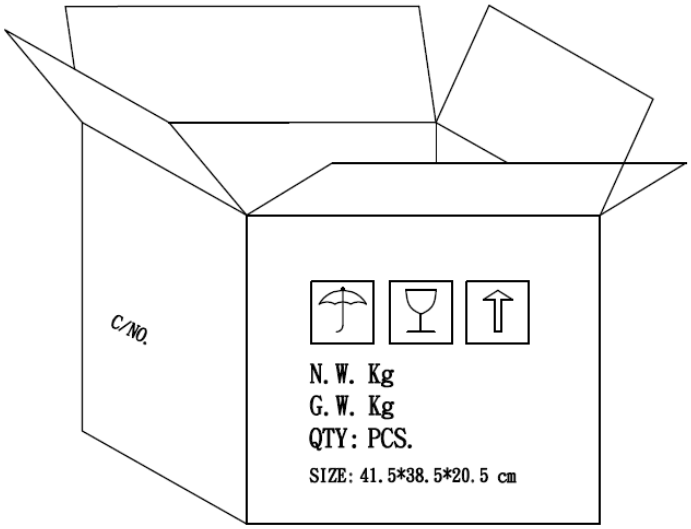

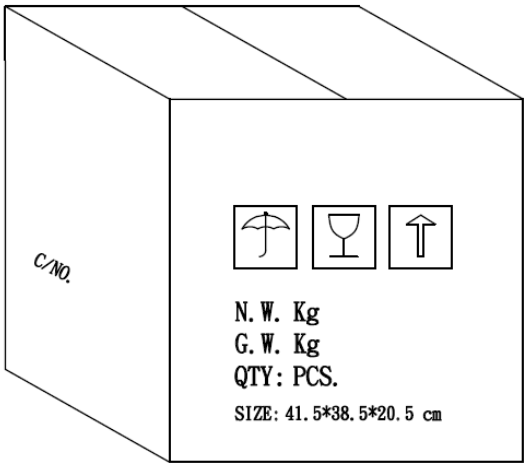

Measurement & Standard Reference

Abstract from GB/T 9396-1996 and IEC 268-5:1989: methods of measurement for main characteristics of loudspeakers.

5.1 Rated sine voltage.

A sinusoidal signal voltage specified by the manufacturer which makes the speaker work continuously in the rated frequency range, without causing electrical or mechanical damage to the speaker. The continuous voltage time is 1 hour.

5.2 Rated sine power.

The rated sine power corresponding with the rated sine voltage defined by: U_S^2/R, where U_s indicates the rated sin voltage and R indicates the rated impedance of the speaker.

5.3 Rated noise power.

The rated sine power corresponding with the rated sine voltage defined by: U_n^2/R, where U_n indicates the rated sin voltage and R indicates the rated impedance of the speaker.

Specifications Revisions

Revision	Description	Date	Approved
A	Released from Engineering	3/25/2024	KH

Note:

1. Unless otherwise specified:
   A. All dimensions are in millimeters.
   B. Default tolerances are ±0.5mm and angles are ±3°, unless otherwise specified.
2. Specifications subject to change or withdrawal without notice.