This document contains data proprietary to PUI Audio Inc. Any use or reproduction, in any form, without prior written permission of PUI Audio Inc. is prohibited.
©2026, PUI Audio Inc.

Data Sheet	AB2332A

Specifications

Parameters	Values	Units
Resonant Frequency	3,200 ± 500	Hz
Resonant Impedance (Max)	500	Ohms
Max Input Voltage	30	Vp-p
Capacitance (@ 100 Hz)	25,000 ± 30%	pF
Plate Material	Ni-Alloy	-
Storage Temperature	-20 ~ 70	°C
Operating Temperature	-20 ~ 60	°C
Environmental Compliances	RoHS/REACH	Exempt. 7c-1

Dimensions

（1）Piezoelectric Ceramics

（2）Ni-Alloy Plate

Figure 1. Unit: mm

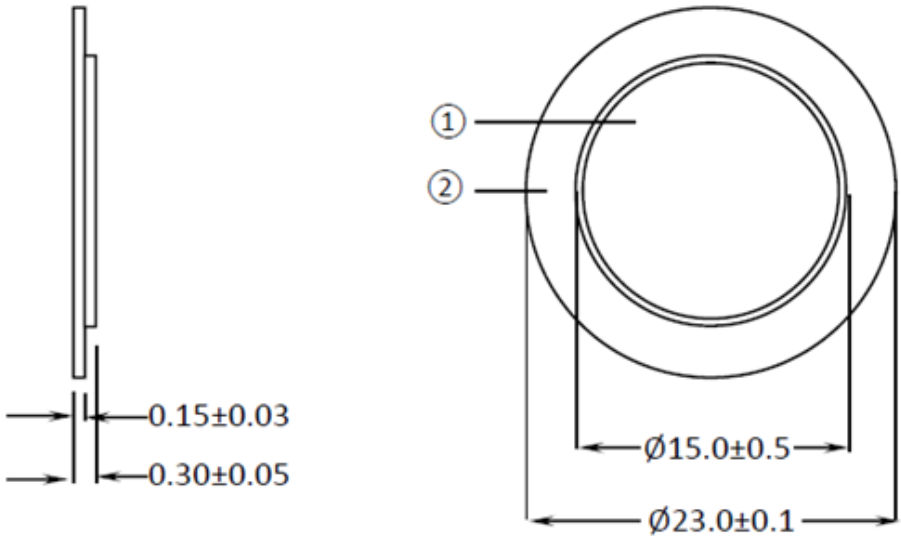

This document contains data proprietary to PUI Audio Inc. Any use or reproduction, in any form, without prior written permission of PUI Audio Inc. is prohibited.
©2026, PUI Audio Inc.

Packaging

150 pcs per roll
3k pcs per foam tray
24k pcs per carton

Specifications Revisions

Revision	Description	Date	Approved
A	Released from Engineering	5/19/2026	JL

Note:

1. Unless otherwise specified:
    A. All dimensions are in millimeters.
    B. Default tolerances are ±0.5mm and angles are ±3°.
        a. For general purposes concentricity of the ceramic and silver is not controlled.
2. Specifications subject to change or withdrawal without notice.