This document contains data proprietary to PUI Audio Inc. Any use or reproduction, in any form, without prior written permission of PUI Audio Inc. is prohibited.
©2026, PUI Audio Inc.

Data Sheet	ABLF1210B

Features:

- Lead Free Piezo Bender
- Small 12mm size
- 10.5kHz resonant frequency

Specifications

Parameters	Values	Units
Resonant Frequency	10,500 ± 1000	Hz
Resonant Impedance (Max)	500	Ohms
Max Input Voltage	30	Vp-p
Capacitance	10,500 ± 30%	pF
Plate Material	Brass	-
Storage Temperature	-20 ~ 70	°C
Operating Temperature	0 ~ 70	°C
Environmental Compliances	RoHS/REACH	

Dimensions

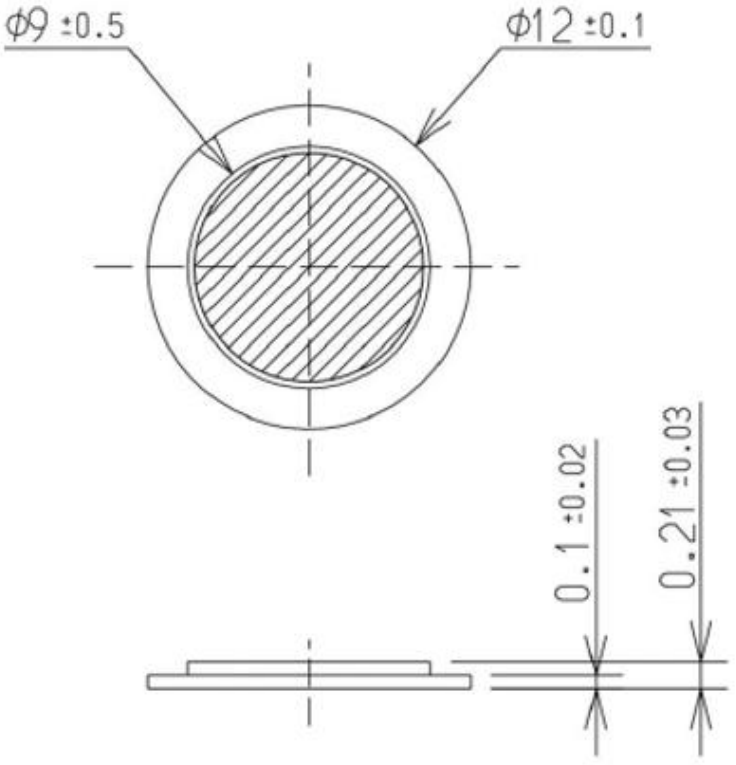

This document contains data proprietary to PUI Audio Inc. Any use or reproduction, in any form, without prior written permission of PUI Audio Inc. is prohibited.
©2026, PUI Audio Inc.

Packaging

50pcs/roll
300 pcs/tray

Specifications Revisions

Revision	Description	Date	Approved
A	Released from Engineering	5/12/2025	JD
B	Updated Resonant frequency, Capacitance	3/19/2026	JL

Note:

1. Unless otherwise specified:
    A. All dimensions are in millimeters.
    B. Default tolerances are ±0.5mm and angles are ±3°.
        a. For general purposes concentricity of the ceramic and silver is not controlled.
2. Specifications subject to change or withdrawal without notice.