This document contains data proprietary to PUI Audio Inc. Any use or reproduction, in any form, without prior written permission of PUI Audio Inc. is prohibited.
©2025, PUI Audio Inc.

PUIaudio

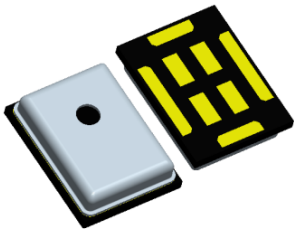

Data Sheet	DMM-4026-2-T

The PUI Audio DMM-4026-2-T digital PDM output MEMS omni-directional microphone features a nominal -26dBFS sensitivity, 58dB(A) signal-to-noise ratio, and a top port.

Features:

- 3.00mm x 4.00mm package
- 1.0mm height
- -26dBFS sensitivity
- 58dB (typical) signal-to-noise ratio
- Omni-directional polar response

Specifications

V_{SUPP} = 1.8V_{DC}, f_{IN} = 1kHz, Acoustic Input = 94dBSPL (1Pa), 0 dBV = 1V @ 1Pa, unless otherwise stated.

Parameters		Values	Units
Typical Sensitivity		-26 ±1	dBFS
Typical Signal-to-Noise Ratio 94dBSPL@1kHz, A-weighted		58	dB
Typical Frequency Range		20 ≤ f ≤ 20,000	Hz
Maximum Total Harmonic Distortion A-weighted 94dBSPL@1kHz		0.15	%
Typical Acoustic Overload Point (AOP) THD = 10%		122	dB
Operating Voltage Range		1.62 ≤ V_S ≤ 3.6	V_{DC}
Maximum Power Supply Current	f_{CLK} = 2.4MHz	780	µA
	f_{CLK} = 768kHz	380	
	f_{CLK} ≤ 15kHz	10	
Maximum Output Impedance		400	Ω
Directivity		Omnidirectional	-
Environmental Compliances		RoHS/Halogen Free	-
Typical Power Supply Rejection (PSR) 100mVpp Square Wave f_{NOISE} = 217Hz A-weighted 768kHz ≤ f_{CLK} ≤ 2.4MHz		-87	dBV(A)
Typical Power Supply Rejection (PSRR) 200mVpp Square Wave 1kHz A-weighted		64	dB

This document contains data proprietary to PUI Audio Inc. Any use or reproduction, in any form, without prior written permission of PUI Audio Inc. is prohibited.
©2025, PUI Audio Inc.

Specifications (continued) V_{SUPP} = 1.8V_{DC}, f_{IN} = 1kHz, Acoustic Input = 94dBSPL (1Pa), 0 dBV = 1V @ 1Pa, unless otherwise stated.

Parameters			Values	Units
Logic-High Input Level	Minimum		(0.65)V_{DD}	V
	Maximum		V_{DD+}0.3	
Logic-Low Input Level	Minimum		-0.3	
	Maximum		(0.35)V_{DD}	
Logic-High Output Level I_{OUT} = 2mA	Minimum		(0.7)V_{DD}	
	Maximum		V_{DD}	
Logic-Low Output Level I_{OUT} = 2mA	Minimum		0.0	
	Maximum		(0.3)V_{DD}	
Bit-Clock Duty-Cycle	f_{CLK} < 3.2MHz	Minimum	40	%
		Maximum	60	
	3.2MHz ≤ f_{CLK} ≤ 4.8MHz	Minimum	48	
		Maximum	52	
Maximum Bit-Clock Rise and Fall Time			6	ns
Delay Time for Valid Data T2, T4 in Timing Diagram	C_{LOAD} = 0pF	Minimum	18	
	C_{LOAD} = 140pF	Maximum	20	
Delay Time for High-Z Logic Output T1, T3 in Timing Diagram		Minimum	5	
		Maximum	16	
Short-Circuit Logic Output Current		Minimum	1	mA
		Maximum	20	
Maximum Logic Output Capacitance Load			140	pF
Maximum Ttime to Activate Wake-Up f_{CLK} ≥ 351kHz			10	ms
Maximum Time to Activate Sleep State f_{CLK} ≤ 1.0kHz			10	
Maximum Mode Change Time			10	
Weight			<0.3	gm
Operating Temperature			-40 ≤ T_O ≤ 85	°C
Storage Temperature			-40 ≤ T_S ≤ 125	°C
MSL (Moisture Sensitivity Level)*			1	-

*MSL level dependent on product remaining in sealed packaging until use

Absolute Maximum Ratings

Parameters	Values	Units
Maximum Voltage on VDD with respect to Ground	5	V_{DC}

This document contains data proprietary to PUI Audio Inc. Any use or reproduction, in any form, without prior written permission of PUI Audio Inc. is prohibited.
©2025, PUI Audio Inc.

Measurement Method Acoustic input applied to the microphone has a 94dBSPL amplitude.

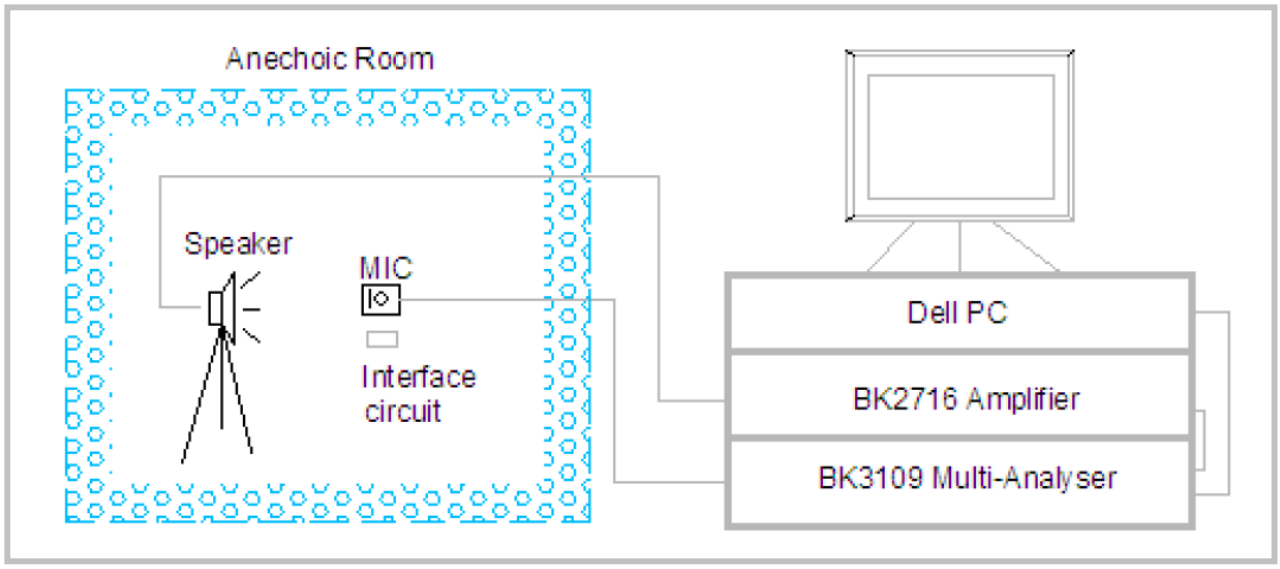

Recommended Drive Circuit

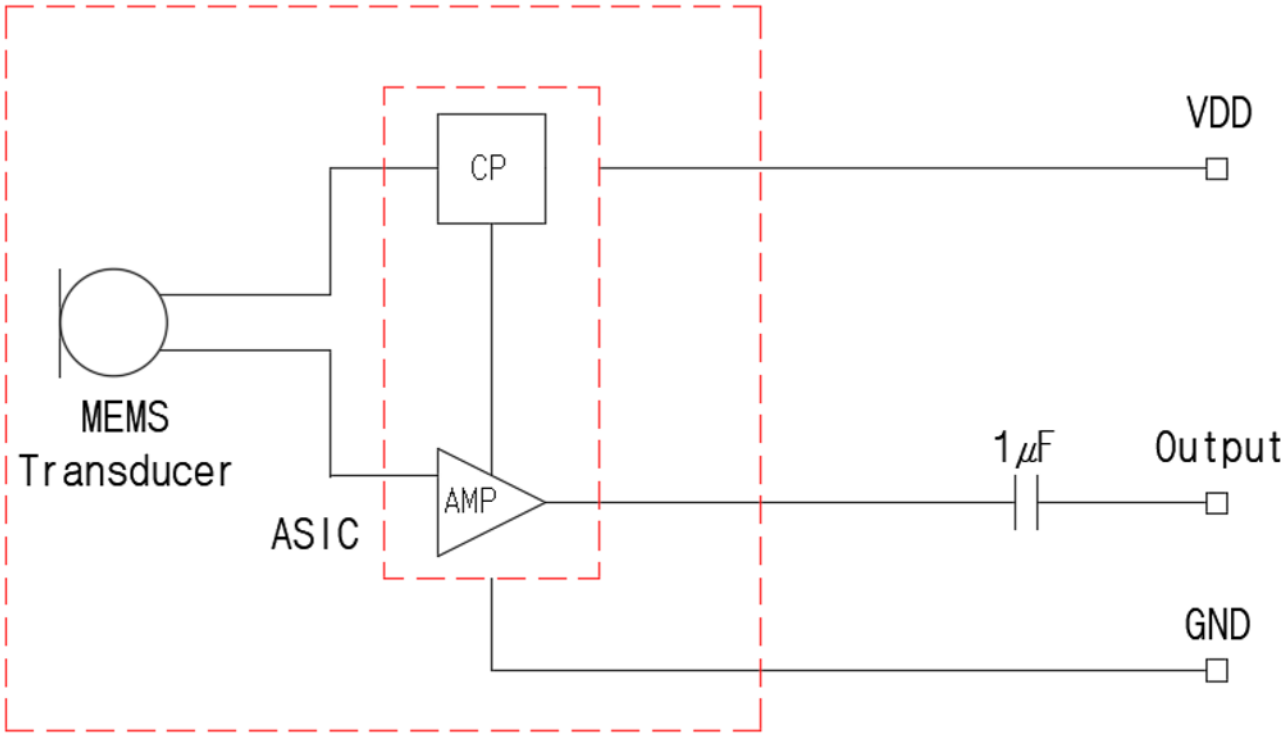

This document contains data proprietary to PUI Audio Inc. Any use or reproduction, in any form, without prior written permission of PUI Audio Inc. is prohibited.
©2025, PUI Audio Inc.

Typical Frequency Response

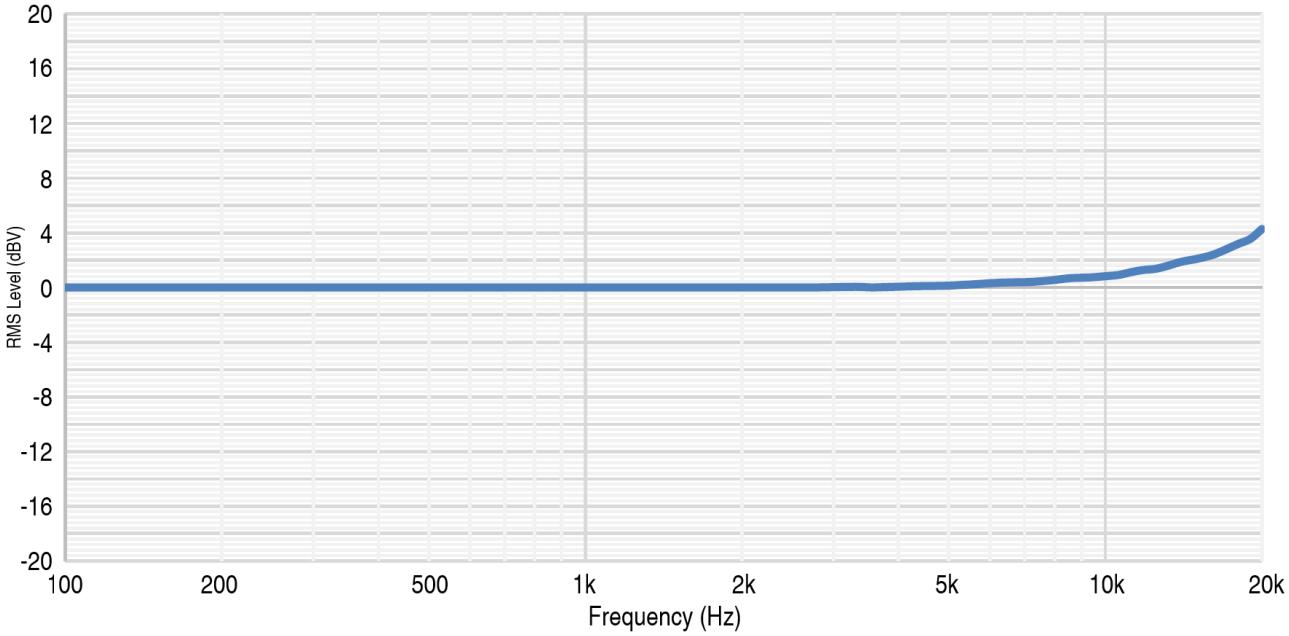

Timing Diagram

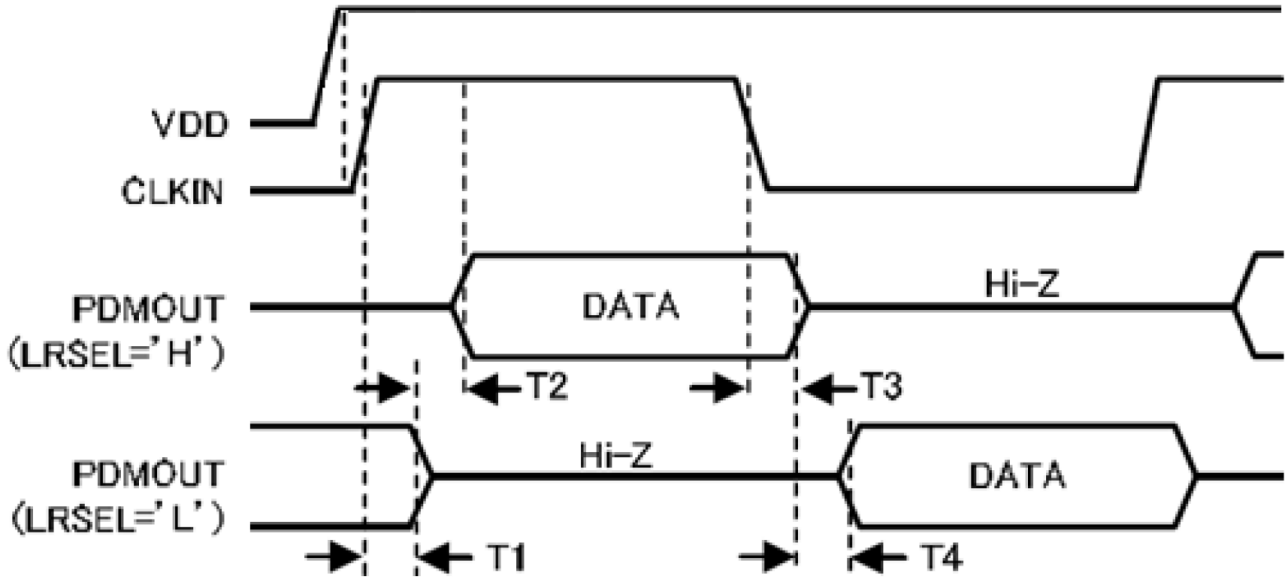

T1, T3 : 5~16ns T2, T4 :18~20ns

This document contains data proprietary to PUI Audio Inc. Any use or reproduction, in any form, without prior written permission of PUI Audio Inc. is prohibited.
©2025, PUI Audio Inc.

Typical Two-Channel Connection Diagram

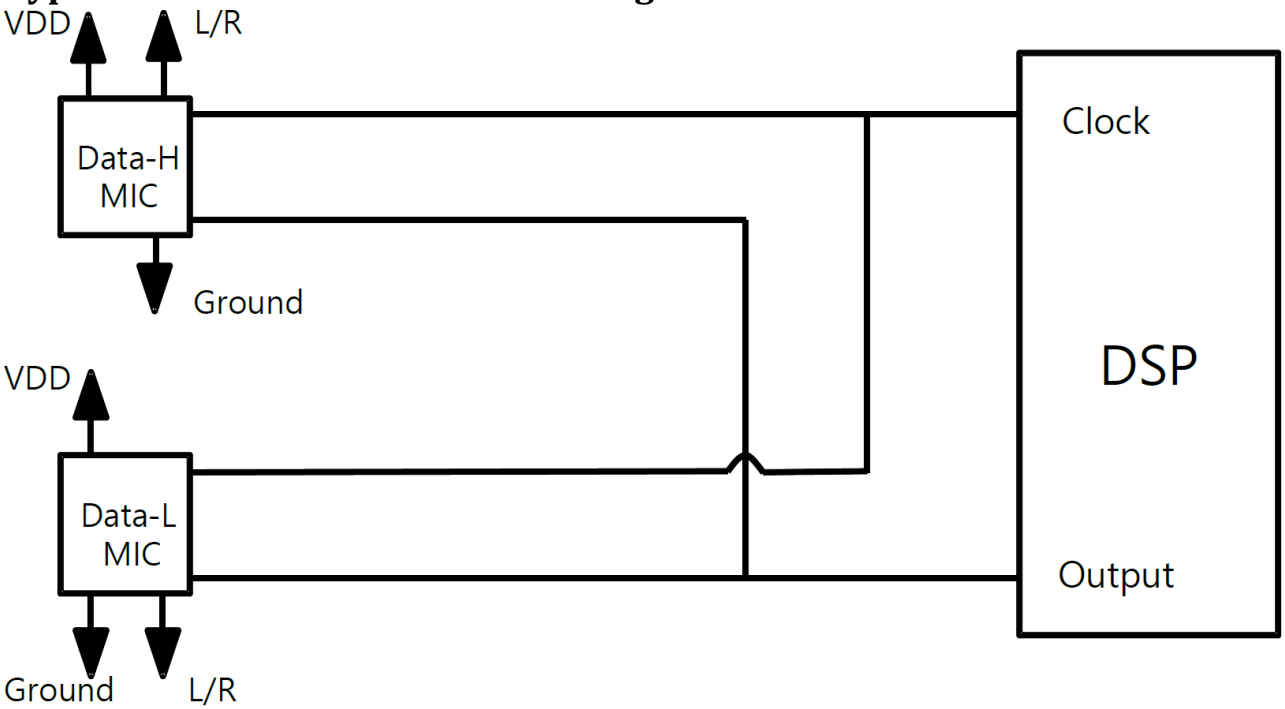

Reliability Testing

Microphone frequency response and sensitivity shall not deviate more than ±3 dB.

Type of Test	Test Specifications
Simulated Reflow (Without Solder)	Samples for qualification testing require 3 passes 260±5 °C reflow solder profiles. 2 hours of setting time is required between each reflow profile test.
Static Humidity	Precondition at +25°C for 1 hour. Expose to +85°C with 85% relative humidity for 120 hours. Finally, dry at room ambient for 3±1 hour before taking final measurement.
Temperature Shock	Each cycle shall consist of 30 minutes at -40°C, 30 minutes at +85°C with 5 minutes transition time. Test duration is for 30 cycles, starting from cold to hot temperature.
ESD Sensitivity	Perform ESD sensitivity threshold measurements for each contact according to MIL-STD-883G, Method 3015.7 for Human Body Model. Identify the ESD threshold levels indicating passage of 8000V Human Body Model.
Vibration Test	Vibrate randomly along three perpendicular directions for 30 minutes in each direction, 4 cycles from 10Hz to 55 Hz with a peak acceleration of 20 Gs.
Shock Test	Subject samples to half-sine shock pulses (3000±15% Gs for 0.3ms) in each direction, for a total of 18 shocks.
Drop Test	Drop samples from 1.5m height onto a steel surface, total 18 times and inspected for mechanical damage.

This document contains data proprietary to PUI Audio Inc. Any use or reproduction, in any form, without prior written permission of PUI Audio Inc. is prohibited.
©2025, PUI Audio Inc.

Recommended Reflow Soldering Procedure

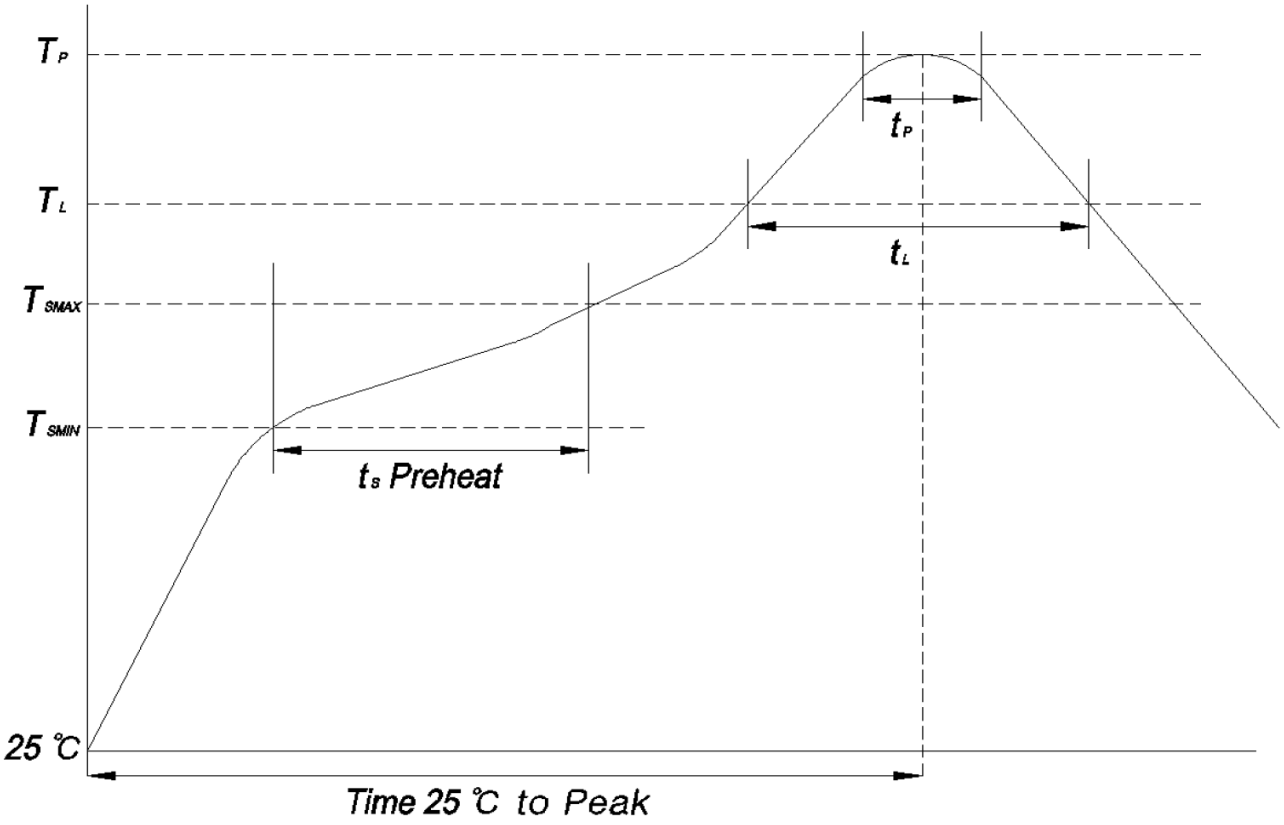

Profile Feature		Lead(Pb) Free Solder
Preheat	Temperature min.(T_{SMIN})	150 ℃
	Temperature max.(T_{SMAX})	200 ℃
	Time (t_S)	60-120 Seconds
Liquidus	Temperature (T_L)	217 ℃
	Time (t_L)	60-150 Seconds
Peak	Temperature (T_P)	260 ℃
	Time within 5 ℃ of actual peak temperature (t_P)	30 Seconds Max.
Ramp up	Average ramp up rate T_{SMAX} to T_P	3 ℃ / Second Max.
Ramp down	Average ramp down rate T_P to T_{SMAX}	6 ℃ / Second Max.
Time 25 ℃ to Peak temperature		8 Minutes Max.

This document contains data proprietary to PUI Audio Inc. Any use or reproduction, in any form, without prior written permission of PUI Audio Inc. is prohibited.
©2025, PUI Audio Inc.

Dimensions (±0.15mm tolerance)

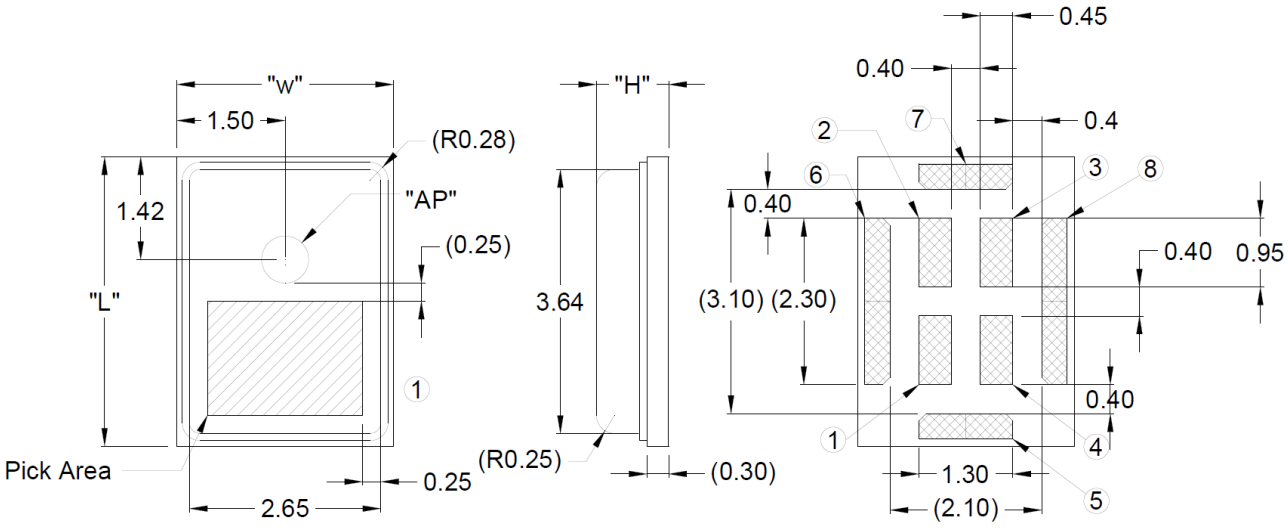

Top view Side view Bottom view

Item	Dimension	Tolerance
Length(L)	4.00	±0.10mm
Width(W)	3.00	±0.10mm
Height(H)	1.00	±0.10mm
Acoustic Port(AP)	Ø0.65	±0.05mm

Pin 1	Pin 2	Pin 3	Pin 4	Pin 5	Pin 6	Pin 7	Pin 8
VDD	L/R	Clock	Output	Ground	Ground	Ground	Ground

Note: Connect the “L/R” pin to ground when the microphone is used in a single-channel application.

This document contains data proprietary to PUI Audio Inc. Any use or reproduction, in any form, without prior written permission of PUI Audio Inc. is prohibited.
©2025, PUI Audio Inc.

PCB Land and Stencil Pattern (This land pattern is advisory only and its use or adaptation is entirely voluntary. PUI Audio disclaims all liability of any kind associated with the use, application, or adaptation of this land pattern.)

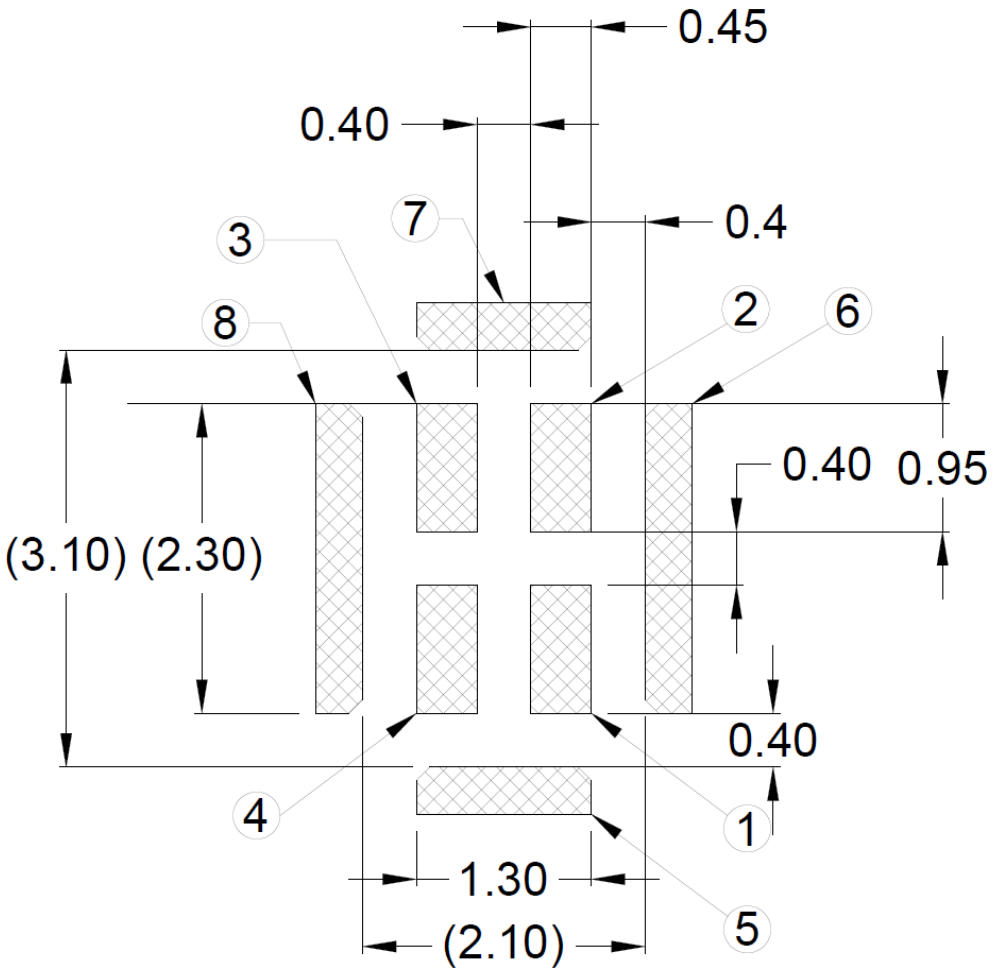

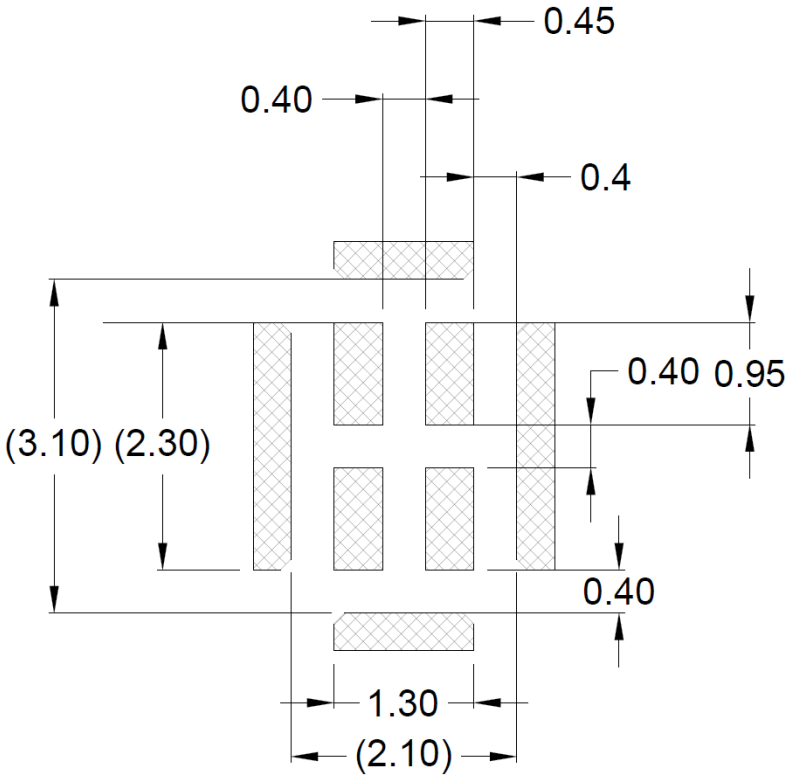

This document contains data proprietary to PUI Audio Inc. Any use or reproduction, in any form, without prior written permission of PUI Audio Inc. is prohibited.
©2025, PUI Audio Inc.

Pick and Place Tool Recommendations

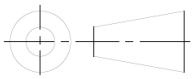

Note : Pick Area only extends to 0.25㎜ of any edge or hole unless otherwise specified.

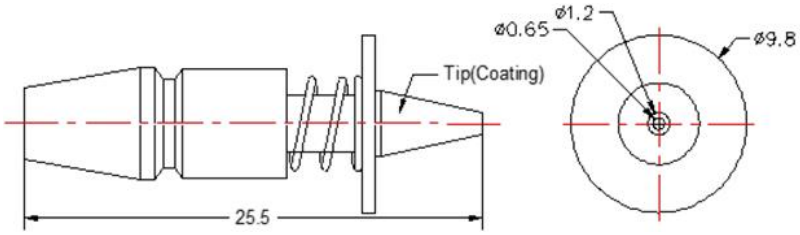

Recommended Nozzle Model : CN065
Interner Diameter : Φ 0.65mm
Externer Diameter : Φ1.2mm

Packaging

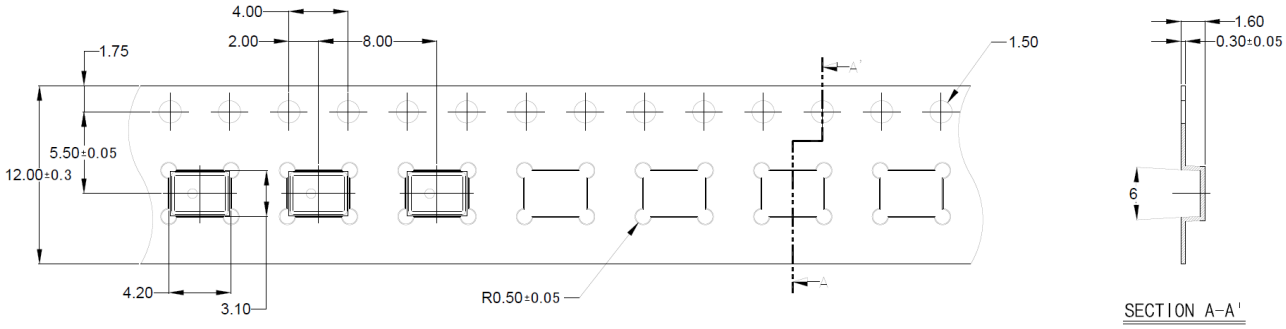

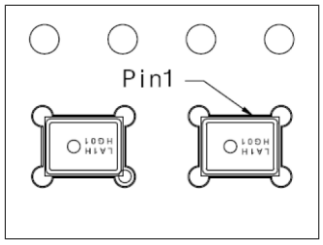

Reel Diameter	Quantity Per Reel
13”	5,700

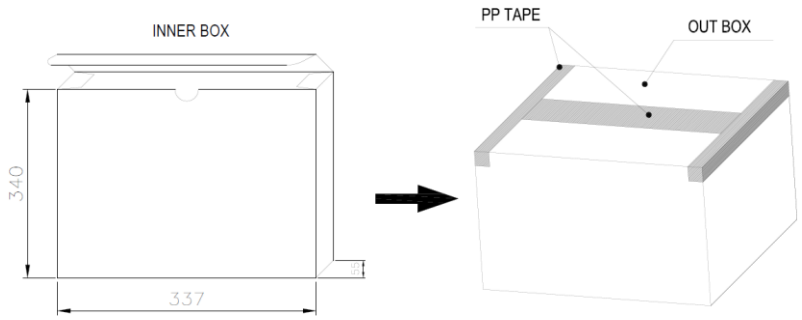

5,700PCS X 2BAG = 11,400PCS

CARTON SIZE : 330(W) X 350(L) X 355(H)
QUANTITY : 68,400 PCS

Specifications Revisions

Revision	Description	Date	Approval
A	Datasheet released from Engineering	04/21/2025	KH

Note:
1. Unless otherwise specified:
   A. All dimensions are in millimeters.
   B. Default tolerances are ±0.5mm and angles are ±3°.
2. Specifications subject to change or withdrawal without notice.